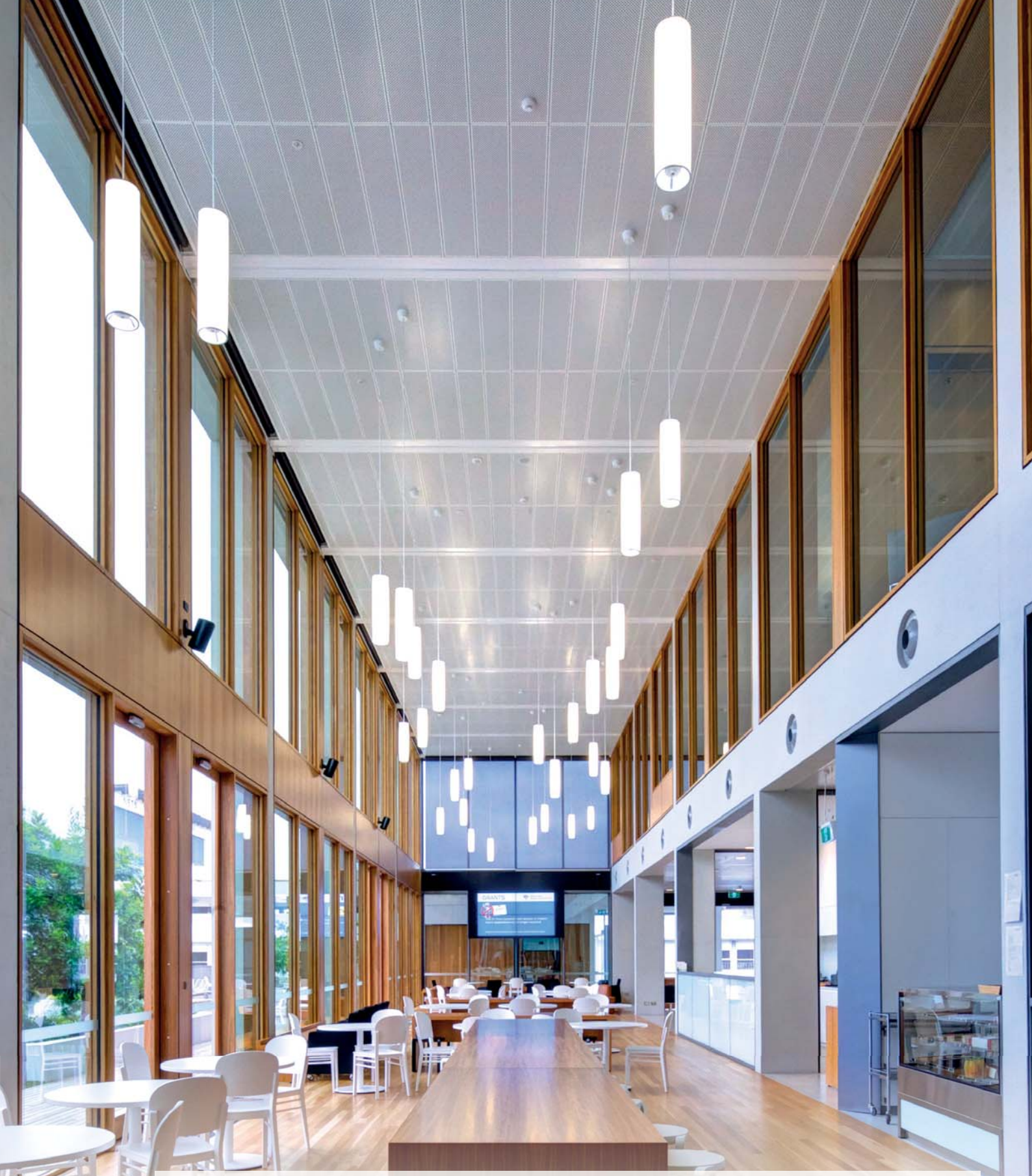

METALWORKS™ R-H215 HOOK ON

Inspiring Great Spaces™

Armstrong®
CEILING SYSTEMS

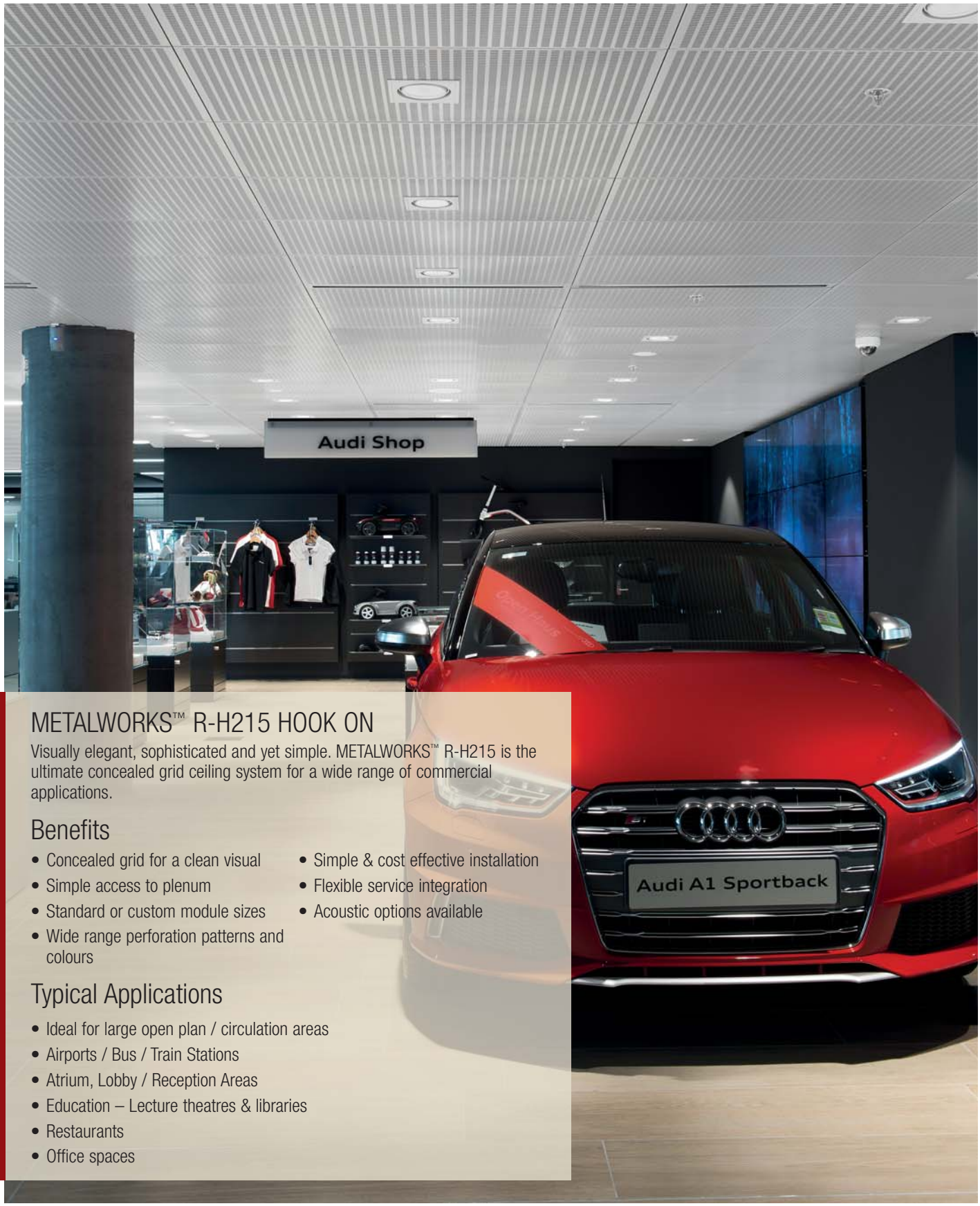

METALWORKS™ R-H215 HOOK ON

Visually elegant, sophisticated and yet simple. METALWORKS™ R-H215 is the ultimate concealed grid ceiling system for a wide range of commercial applications.

Benefits

- Concealed grid for a clean visual
- Simple access to plenum
- Standard or custom module sizes
- Wide range perforation patterns and colours
- Simple & cost effective installation
- Flexible service integration
- Acoustic options available

Typical Applications

- Ideal for large open plan / circulation areas
- Airports / Bus / Train Stations
- Atrium, Lobby / Reception Areas
- Education – Lecture theatres & libraries
- Restaurants
- Office spaces

Above: *Audi-Maserati Melbourne, METALWORKS™ R-H215 Hook On, 1250mm x 625mm Slotted Pattern.*
Cover: *The Westmead Institute for Medical Research, METALWORKS™ R-H215 Hook On.*

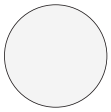

Satin White (WH)

Custom colours available

Due to printing limitations, shades may vary from actual product.

Unperforated

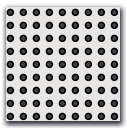

Standard Perforation
Hole diameter: 2.5mm
Open area: 16%

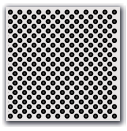

Micro Perforation
Hole diameter: 1.5mm
Open area: 22%

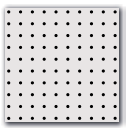

Extra Micro Perforation
Hole diameter: 0.7mm
Open area: 1.5%

PHYSICAL DATA AND PERFORMANCE

Panel Details	Unperforated	Standard Perforation with Acoustical Fleece	Micro Perforation with Acoustical Fleece	Extra Micro Perforation with Acoustical Fleece
Open Area (%)	–	16	22	1.5
Hole Dia (mm)	–	2.5	1.5	0.7
Light Reflectance (%)	85	70	65	80
NRC	0.10	0.80	0.70	0.65
CAC (dB)	44	18	16	21
Design /Finish: Powdercoated in Satin White (MA124A)	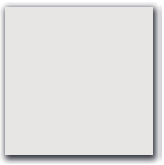	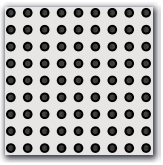	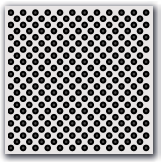	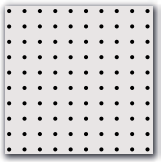
Dimensions (mm)	Item Numbers	Item Numbers	Item Numbers	Item Numbers
1200x400	RH124M1WH	RH124M10WH	RH124M2WH	RH124M3WH
1200x600	RH126M1WH	RH126M10WH	RH126M2WH	RH126M3WH
1350x450	RH135M1WH	RH135M10WH	RH135M2WH	RH135M3WH
1500x300	RH153M1WH	RH153M10WH	RH153M2WH	RH153M3WH
1500x500	RH155M1WH	RH155M10WH	RH155M2WH	RH155M3WH

Specification: Armstrong METALWORKS™ R-H215 Hook-On Ceiling System with concealed Unigrid™ Channel Suspension Grid.

Panel Material: Galvanised steel sheet (aluminium on request). Panel width up to 400mm: 0.6mm, Panel width from 401mm: 0.7mm.

Surface Finish: Powdercoated Satin White (MA124A). Custom colours available.

Perforation Patterns: As above. Other patterns on request. Refer to Perforation Catalogue on website.

Edge Detail: Short ends: R-H215 Hook On; Long sides: Square Edge.

Panel Junction: 3mm black gasket on one long and one short side.

Acoustic Inlay: Black non-woven acoustic fleece as standard. Other options available on request.

Typical Module Sizes: As above, Other sizes on request.

Grid System: Concealed Unigrid™ Channel Grid in combination with H-Bar (Hook On Rail).

System Weight: 8.07kgs/m^2

Perimeter solutions: Range of standard aluminium wall angles, trims, pelmets plus custom bulkheads and fully integrated drywall solutions available.

Service integration: Panels can be supplied with factory produced cut outs and apertures for the integration of building services equipment.

Special capabilities: Various custom solutions on request. Can be combined with other Armstrong products.

Conforms with BCA Spec. C1.10 and tested to AS/NZS 3837:1998 – Group 1, ISO 5660 – Group 1–S

Humidity Resistance RH99%

SUSPENSION SYSTEM AND ACCESSORIES

Item Number	Description
UNI111B	Unigrid™ Channel (3750mm)
UNI103B	Unigrid™ Channel Connector
HBAR3600	H-Bar for RH215 (3600mm)
UNI101	H-Bar Hanger
UNI112S	H-Bar Connector
UNI203B	Suspension Clip for 5mm Rod
UNITRCB	Suspension Clip for M6 Threaded Rod
ROD 5mm	5mm Suspension Rod
UNI200	Locking Clip
AL008RCPSW	Std "L" Wall Angle
AL009RCPSW	Shadowline Wall Angle
UNI202	Unigrid™ Wall Anchor Bracket

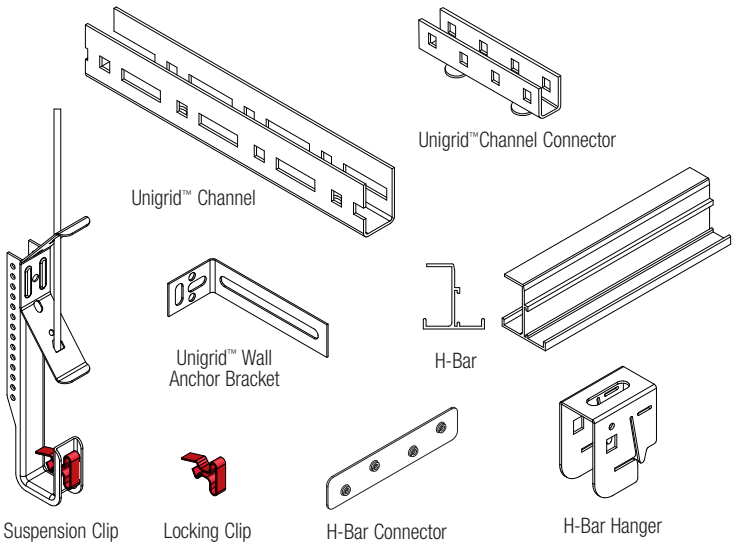

INSTALLATION DETAIL

CROSS SECTION

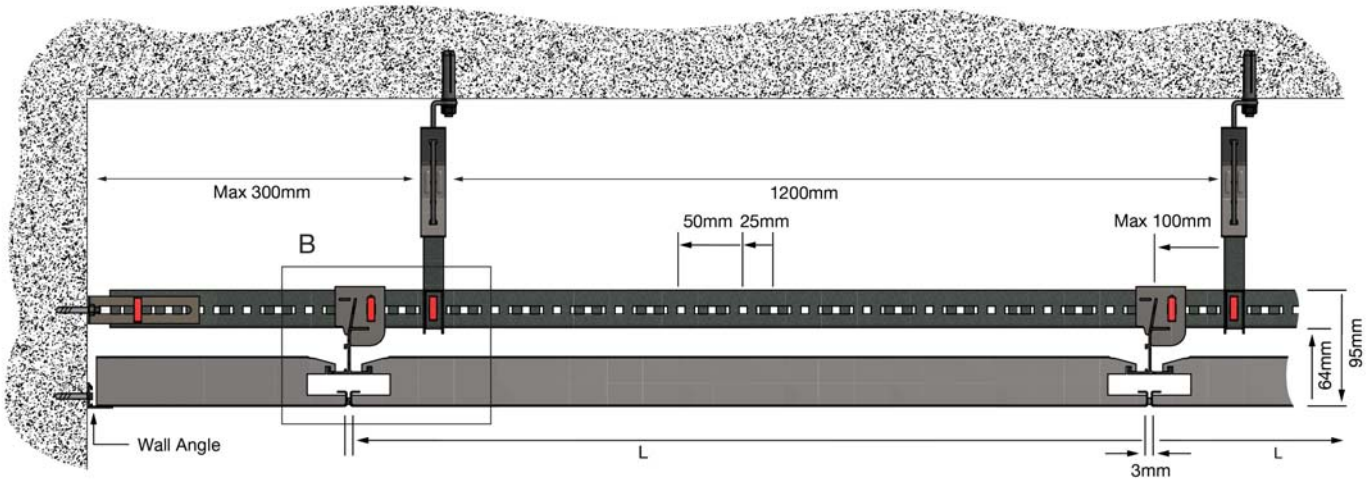

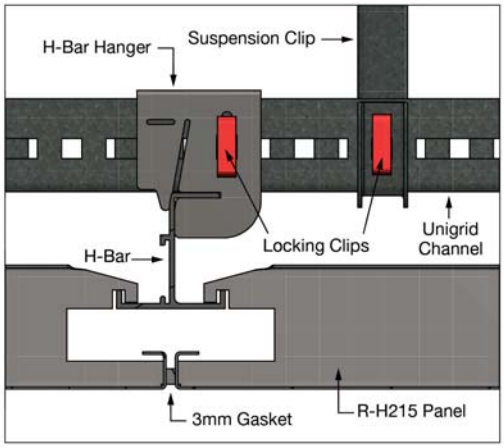

Detail B

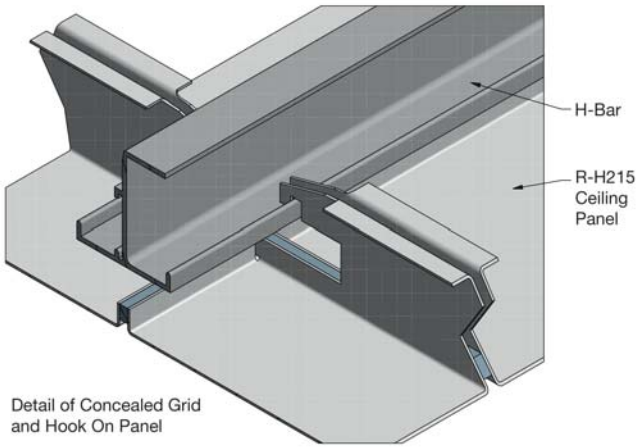

Detail of Concealed Grid and Hook On Panel

LONGITUDINAL SECTION

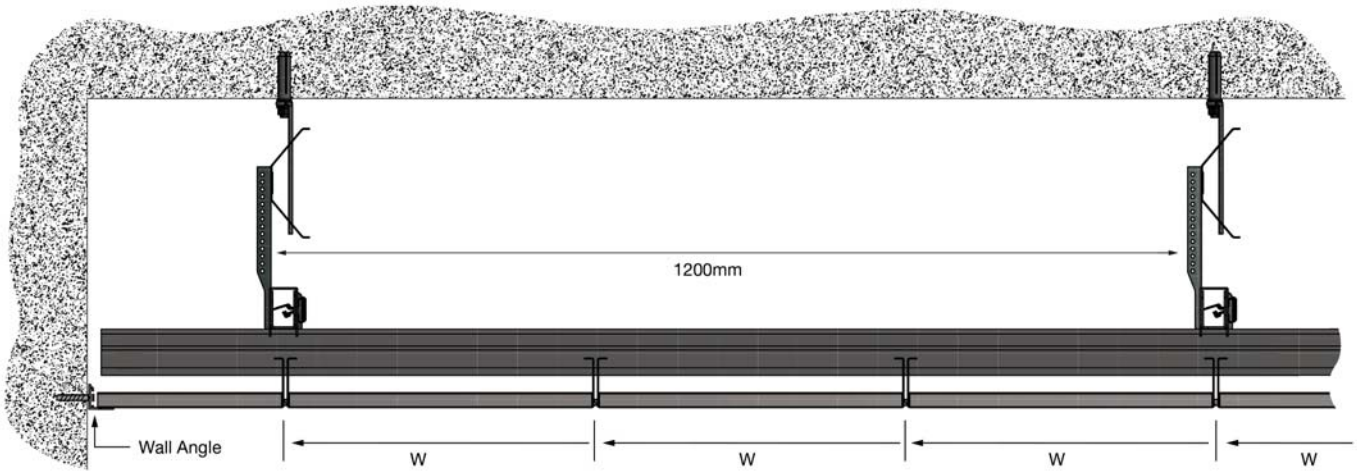

W = Panel Width
L = Panel Length
Module = Panel Width / Length + 3mm

INSTALLATION DETAIL

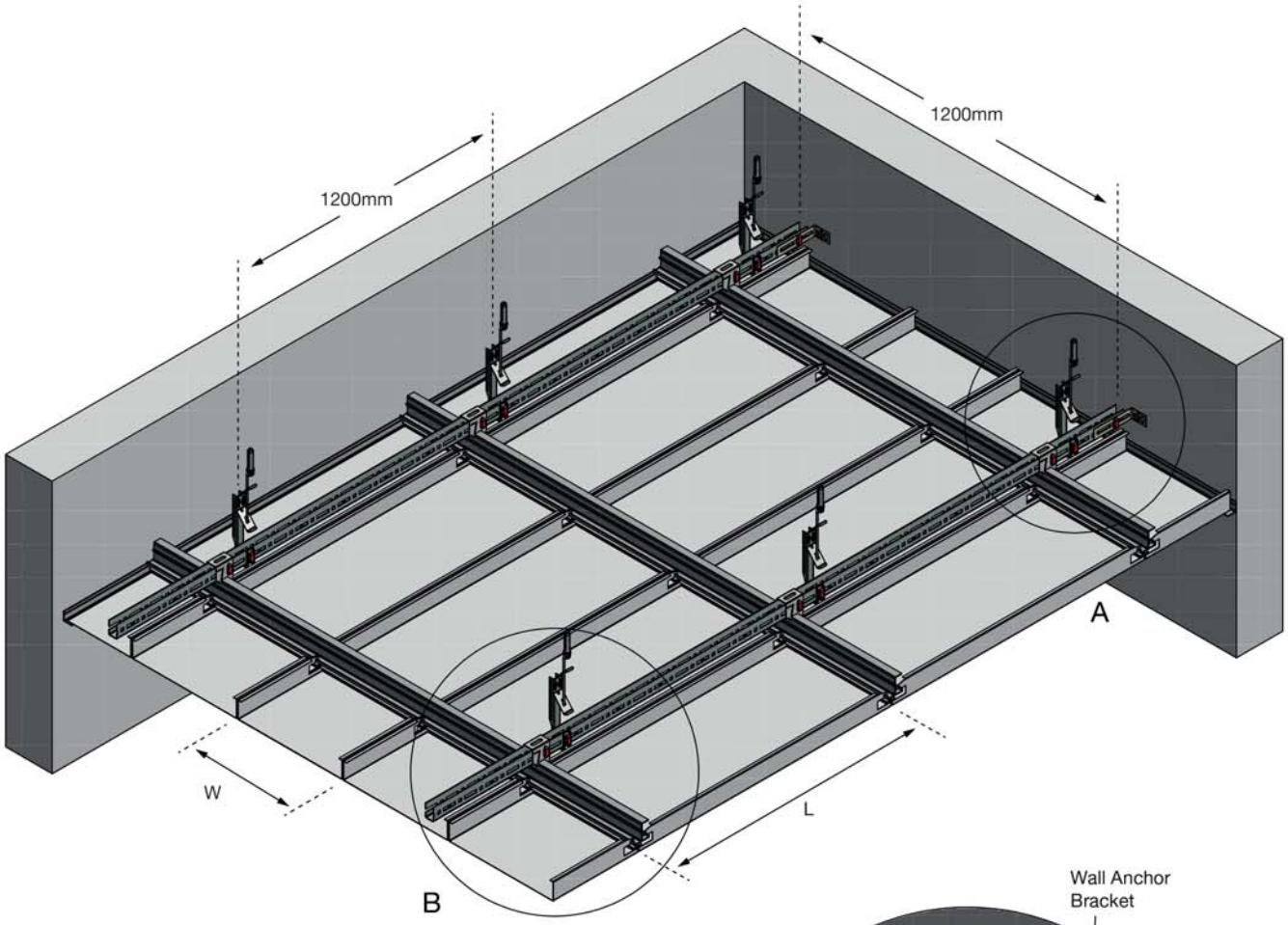

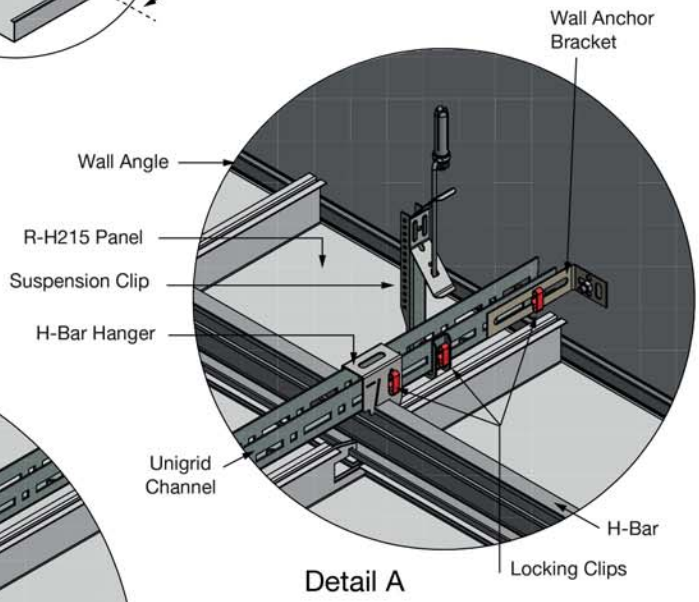

Detail A

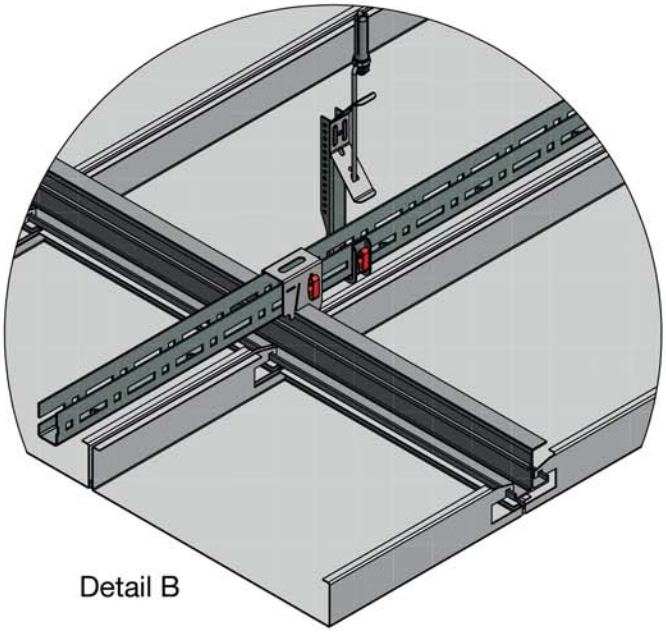

Detail B

Note: Please refer to the
Armstrong METALWORKS™ R-H215
Brochure for specification and performance details

Club Nokia, Los Angeles, METALWORKS™ R-H215, Micro Perforation (Rd 1522) Custom Plank System, Custom RAL 7024 finish

CONTACT

Armstrong World Industries Pty Ltd

NSW
Armstrong World Industries Pty. Ltd.
99 Derby Street, Silverwater NSW 2128
Telephone (02) 9748 1588
Facsimile (02) 9748 8449

VIC/TAS
Armstrong World Industries Pty. Ltd.
29-39 Mills Road, Braeside VIC 3195
Telephone (03) 9580 9633
Facsimile (03) 9587 5139

QLD/NT
Armstrong World Industries Pty. Ltd.
6 Barrinia Street, Slacks Creek QLD 4127
Telephone (07) 3809 5565
Facsimile (07) 3809 5507

SA
Total Building Systems Pty. Ltd.
160 Grand Junction Road, Blair Athol SA 5084
Telephone (08) 7325 7555
Facsimile (08) 7325 7566

WA
Ceiling Manufacturers of Australia Pty. Ltd.
5 Irvine Street, Bayswater WA 6053
Telephone 08) 9271 0777
Facsimile (08) 9272 2801

New Zealand
Forman Building Systems Ltd.
PO Box 12349, Penrose, Auckland
Telephone 64-9-276 4000
Facsimile 64-9-276 414

www.armstrongceilings.com.au

SCAN* THIS CODE to learn more about our METALWORKS RH215 Hook On

*Download a Free QR code reader app available from Apple store

Printed on Maine Recycled Silk paper

©2015 Armstrong World Industries Pty Ltd.

AWP0615

Inspiring Great Spaces™

Armstrong®
CEILING SYSTEMS